Hillmar
Hillmar Industries Ltd.
7371 Vantage Way
Delta, BC V4G 1C9
P:604 946-7115 F:604 946-0329
info@hillmar.com www.hillmar.com

DISC SD30 MM
SDBD-0450-30-170
SPECIFICATION SHEET
SLS & MKTG
ENGLISH

Sheet Number:			
Job Number:			
Form Number: 429-530-46416PT			
Company / Project Reference:	Date.:	Page.: 1 OF 1	Document Package No.:	Rev.:

Inventor Drawing

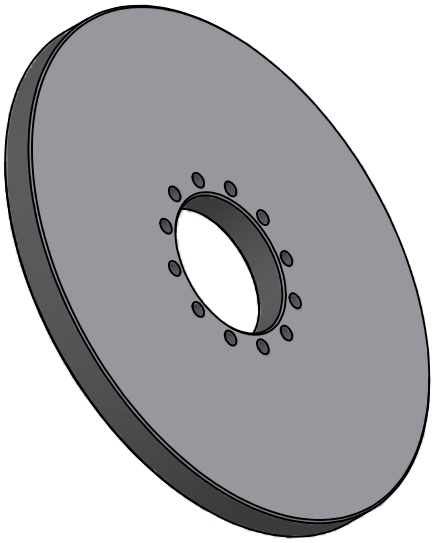

FEATURE	CODE
Solid disc bolted	SDBD
Disc size	0450
Disc thickness (mm)	30
Coupling size (Hub OD)	170

Example for ordering	SDBD-0450-30-170

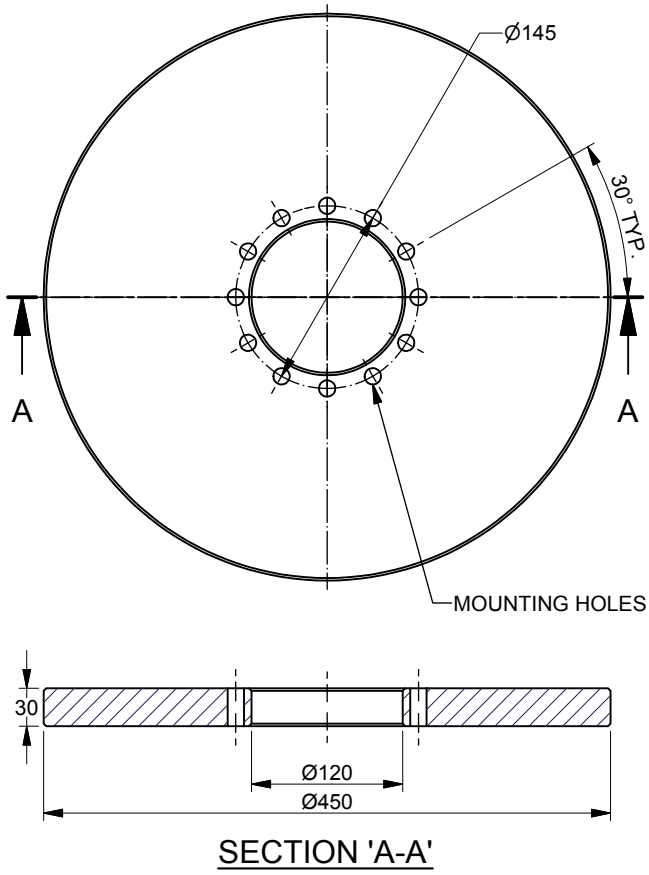

TECHNICAL DATA

Disc diameter (mm)	450
Hub bore size (mm)	120
Disc thickness (mm)	30
Coupling size (mm)	170
Mounting holes	12 x Ø13
Mounting bolts	12 x M12
Bolt tightening torque (Nm)	84
Moment of inertia (kgm^2)	0.4727
Weight (kg)	34,4

NOTES

All figures are nominal figures only

All dimensions are in millimeters

Document Template #710-101-62058

** ALL TECHNICAL DATA IS SUBJECT TO CHANGE WITHOUT NOTICE **
Hillmar works have a fully registered ISO 9001-2008 quality assurance programme (QCB #01-1525)

C:\TEMP\a3f49bb3-e10c-4cd0-aed8-26c1c4c1b337\8000052851 3\HILLMAR\HILLMAR PRODUCTION\04 THRUSTER DB\0700-4\07004005 PKM-GKM-RKSM-RKX\SPC-SHT-PKM-GKM-RKSM-RKX\06 SD-30\46416 SDBD-0450-30-170.idw